天立电机（宁波）有限公司
Tianli Electrical Machinery(Ningbo)Co.，Ltd

ALWAYS RoHS compliant

QUICK PLUG CONNECTOR P.C.B.-TQS-B-6.3-XXP-X

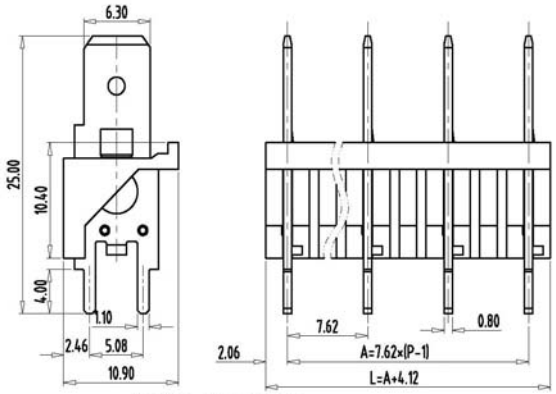

图示(Pic. shown)：TQS-B-6.3-04P-K

General.	Quick plug connector P.C.B　Rated : 300V,16A
	Single row , 7.62mm pitch， 02-11 Pole
	Orientation: 90°(plug-in to board)
	Screw clamp unit:

认证（Approval）：

PCB Layout

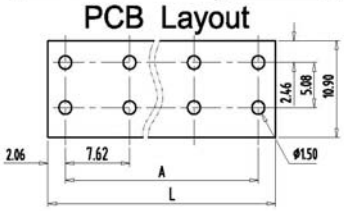

技术参数Technical Data

	UL standard			IEC standard		
UL应用组别(UL Application group)	UL Application group			IEC过电压别/污染等级(IEC overvoltage category /pollution degree)		
IEC过电压别/污染等级(IEC overvoltage category /pollution degree)	B	C	D	III / 3	III / 2	II / 2
额定电压(Rated voltage)	300V	--	--	--	--	--
额定电流(Rated current)	16A	--	--	--	--	--
额定连接容量(Rated connection capacity)	--			--		

绝缘材料(Insulation Material)	PC UL 94 V0
电流承载部件材料和镀层(Material & Plating of Current carrier)	Steel ，Tin plated
接线弹片材料(Material of Clamp spring)	--
绝缘电阻(Insulation Resistance)	500MΩ or more at DC500V
耐电压(1分钟)(Withstanding Voltage/1Min)	1600V
额定冲击电压(Rated surge voltage)	
适合的母端接线范围(Suitable Wire Range in female contact)	14AWG
固定螺丝(Mounting Screw)，扭矩(torque)	--
剥线长度(Wire stripping length)	--
使用温度(Operating temperature)	-40°C up to +125°C
焊接方式(Soldering recommend)	Wave soldering ,260°C 5S Max (Single Wave) , 260°C 10S Max(Double Wave)

订购方式(How to order)

TQ	S	—	B	—	6.3	—	XXXX	—	XXP	—	K
Series No. 系列号	Connection angle 角度 V=90° plug-in to board		Pitch 间距 B=7.62mm		Tab Specification 插片规格		Special code 特编号 XXXX=custom-made blank=standard		No. of Poles 极数 02-11P		Color 颜色 Black: K

Web:wwww.china-tianli.com　TEL:+86-574-6347-9600,6389-6436　Mail : sale@china-tianli.cn
地址:中国浙江省宁波杭州湾新区庵东工业园区纬三路138号
ADD：138，Weisan Rd.,Andong Development Zone,Hangzhou Bay Area,Ningbo,Zhejiang,China